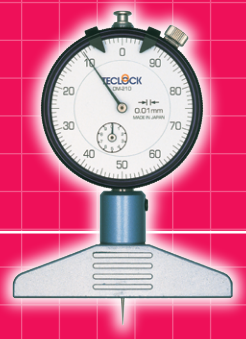

4 Depth Gauge

This is an exclusive instrument which measures steps and depth of work piece by hand. Setting "0" by sticking bottom face to measuring basics (zero point) and rotating bezel. (Bezel is fixed by clamp at that time.). Then, it reads with short hand and pointer how contact point is salient from that position. Analog and Digital models are available and they correspond to usage of shape of contact point and basic size. There are such standard models of stroke of 10mm, 20mm and 30mm and it can comparatively measure depth of 220mm to 240mm by connecting extension rods.

Measuring depth of concavity of work of which center is bored. The photo shows 2.03mm.

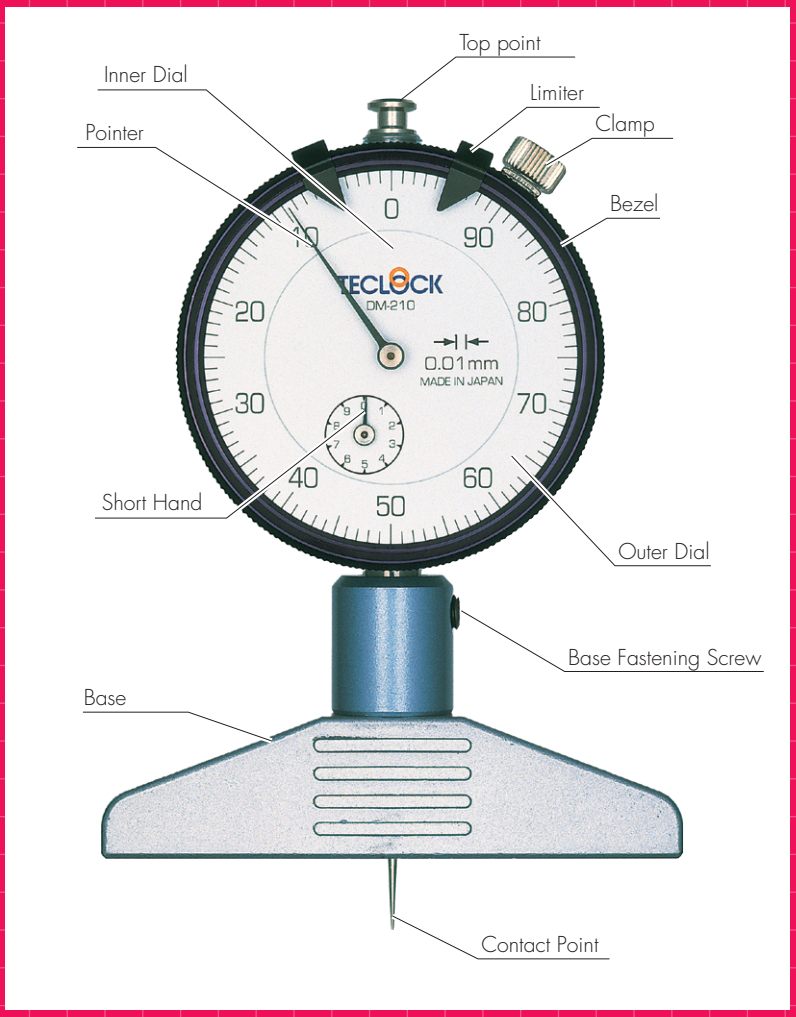

Dial Depth Gauges

- Dial Depth Gauge can be used to measure depth and steps of work piece and coating thickness.
- 5-240mm range (with the supplied extension rods) are available for wide application.
- Special order is applicable for contact point and base.
- Low measuring force type is also available, which seldom hurts work piece.
- Lifting lever (Option) can be mounted.

Measuring Range:10mm

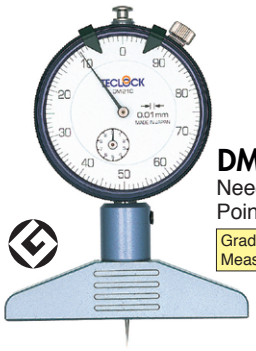

DM-210
Needle Contact Point
Graduation 0.01mm
Measuring Range 10mm

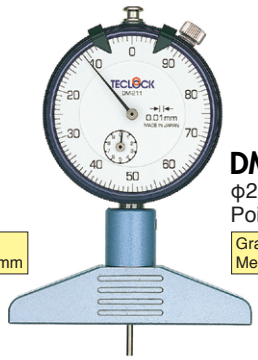

DM-211
ϕ2 Flat Contact Point
Graduation 0.01mm
Measuring Range 10mm

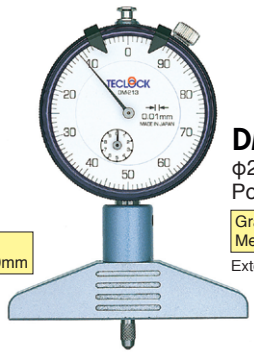

DM-213
ϕ2 Ball Contact Point
Graduation 0.01mm
Measuring Range 10mm
Extension rods options

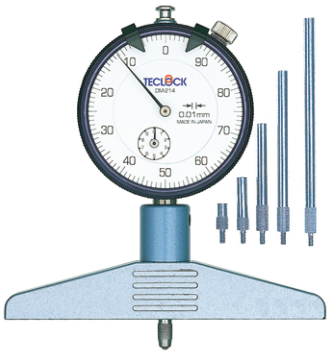

DM-214
Possible depth measurement of up to 220mm
Graduation 0.01mm
Measuring Range 10mm
Indication Range 10mm
with 5-Extension rods

Dimensions

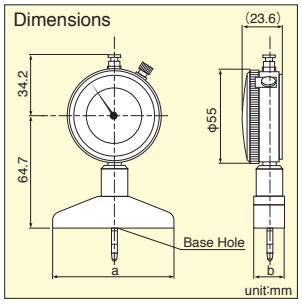

Dimensions Table

Model	Base Form axb	Base Hole Diameter
DM-210	75x16	2.5
DM-211	75x16	2.5
DM-213	75x16	5.2
DM-214	100x16	5.2

unit:mm

Specifications ※Measuring Range : ( ) value is a range by using 5pcs extension rods.

Model	Graduation (mm)	Measuring Range (mm)	Accuracy (μm)	Contact Point Form (mm)	Standard Contact Point	Measuring Force (N)	Weight (g)
DM-210	0.01	10	±12	Needle	ZS-523	1.4以下	270
DM-211	0.01	10	±12	φ2 Flat	ZS-530	1.4以下	270
DM-213	0.01	10	±12	φ3.2 Ball	ZS-034	1.4以下	270
DM-214	0.01	10(220)	±12	φ3.2 Ball	ZS-034	2.5以下	335

Measuring Range:5mm

DM-250
Small type
Graduation 0.01mm
Measuring Range 5mm

Dimensions

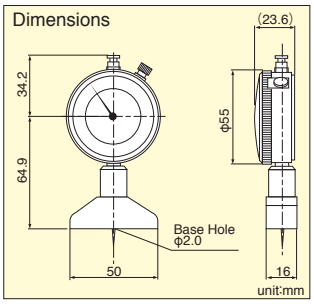

Specifications

Model	Graduation (mm)	Measuring Range (mm)	Accuracy (μm)	Contact Point Form (mm)	Standard Contact Point	Measuring Force (N)	Weight (g)
DM-250	0.01	5	±10	Needle	ZS-518	1.4 or less	230

Measuring Range:20mm / 30mm

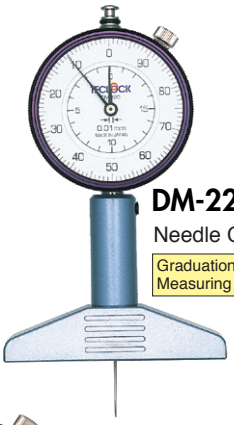

DM-220 / 230
Needle Contact point
Graduation 0.01mm
Measuring Range 20mm/30mm

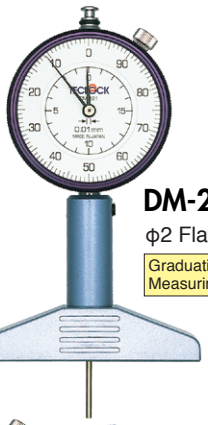

DM-221
ϕ2 Flat Contact Point
Graduation 0.01mm
Measuring Range 20mm

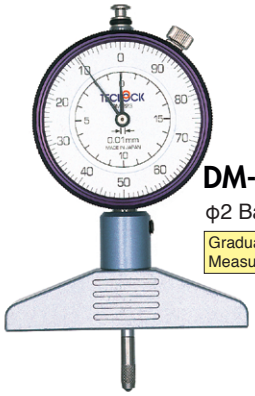

DM-223
ϕ2 Ball Contact Point
Graduation 0.01mm
Measuring Range 20mm

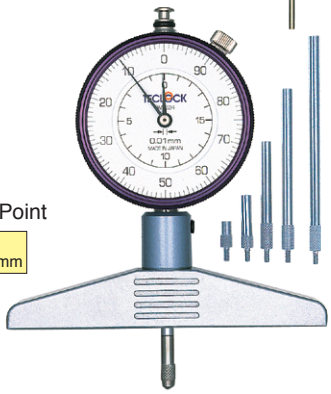

DM-224/233/234
Possible depth measurement of up to 230mm (DM-224) / 240mm (DM-233/234)
Graduation 0.01mm
Measuring Range 230mm/240mm
Indication Range 20mm/30mm
with 5-Extension rods

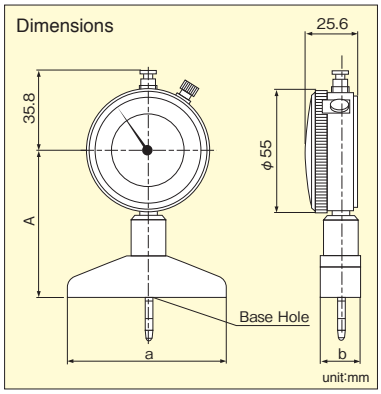

Dimensions Table

Model	A	Base Form a×b	Base Hole Diameter
DM-220	84.7	75×16	2.5
DM-221	84.7	75×16	2.5
DM-223	64.7	75×16	5.2
DM-224	64.7	100×16	5.2
DM-230	84.7	75×16	2.5
DM-233	64.7	75×16	5.2
DM-234	64.7	100×16	5.2

unit:mm

Specifications ※Measuring Range : ( ) value is a range by using 5pcs extension rods.

Model	Graduation (mm)	Measuring Range (mm)	Accuracy (μm)	Contact Point Form (mm)	Standard Contact Point	Measuring Force (N)	Weight (g)
DM-220	0.01	20	±15	Needle	ZS-543	2.2以下	300
DM-221	0.01	20	±15	ϕ2 Flat	ZS-541	2.2以下	300
DM-223	0.01	20	±15	ϕ3.2 Ball	ZS-034	2.2以下	275
DM-224	0.01	20(230)	±15	ϕ3.2 Ball	ZS-034	2.5以下	340
DM-230	0.01	30	±35	Needle	ZS-543	2.5以下	315
DM-233	0.01	30(240)	±35	ϕ3.2 Ball	ZS-034	2.5以下	315
DM-234	0.01	30(240)	±35	ϕ3.2 Ball	ZS-034	2.5以下	355

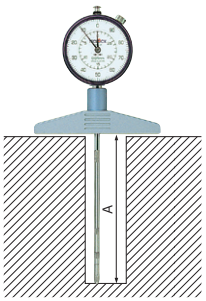

Depth Gauge with Extension Rods

When all of 5 extension rods of depth gauge with extension rods are connected, it can measure the dimension of deep concavity part of bottom. (Standard dimension set up with master gauge is necessary).

A dimension : Measuring range 10mm Depth Gauge : up to maximum 220mm
Measuring range 20mm Depth Gauge : up to maximum 230mm
Measuring range 30mm Depth Gauge : up to maximum 240mm

Measuring Range:50mm

- A large sized depth gauge measurable 0-50mm (actual dimension) depth directly without any extension rod.
- The dial part is a type movable by inserting it into one of 3 holes.

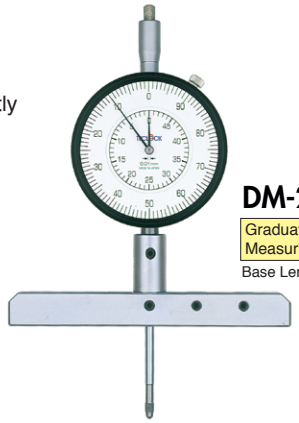

DM-295

Graduation 0.01mm
Measuring Range 50mm
Base Length 150mm

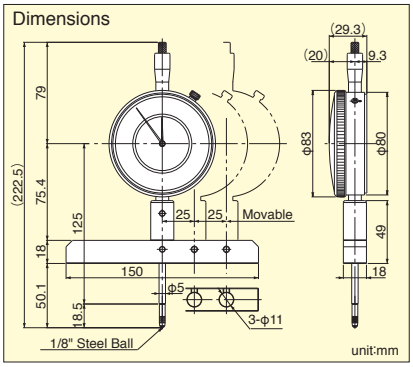

Specifications

Model	Graduation (mm)	Measuring Range (mm)	Accuracy (μm)	Contact Point Form (mm)	Standard Contact Point	Measuring Force (N)	Weight (g)
DM-295	0.01	50	±50	φ3.2 Ball	ZS-116	2.5以下	750

Dial Depth Gauges (Special)

Back plunger type

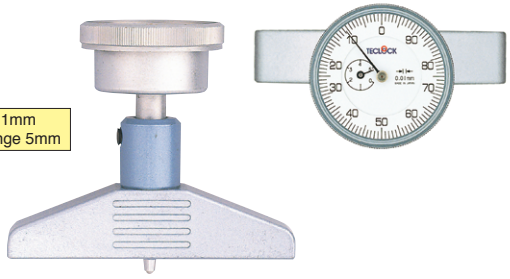

DM-273

Graduation 0.01mm
Measuring Range 5mm

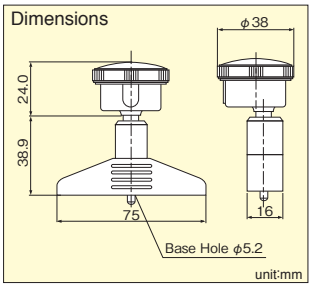

Specifications

Model	Graduation (mm)	Measuring Range (mm)	Accuracy (μm)	Contact Point Form (mm)	Standard Contact Point	Measuring Force (N)	Weight (g)
DM-273	0.01	5	±10	φ3.2 Ball	ZS-105	1.4 or less	210

Round Base type

DM-280

Graduation 0.01mm
Measuring Range 10mm
Base form φ16mm

DM-283

Graduation 0.01mm
Measuring Range 10mm
Base form φ25mm

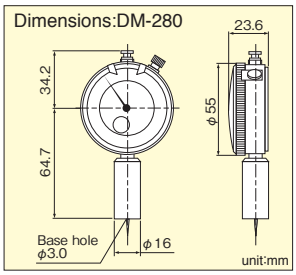

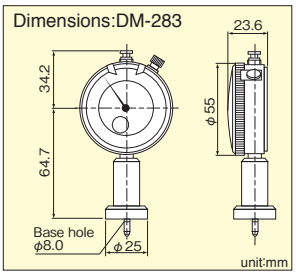

Specifications

Model	Graduation (mm)	Measuring Range (mm)	Accuracy (μm)	Contact Point Form (mm)	Standard Contact Point	Measuring Force (N)	Weight (g)
DM-280	0.01	10	±12	Needle	ZS-523	1.4 or less	175
DM-283	0.01	10	±12	φ3.2 Ball	ZS-034	1.4 or less	185

Printed circuit board for measurement

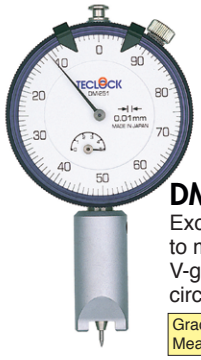

DM-251

Exclusive instrument to measure depth of V-groove of print circuit board.

Graduation 0.01mm
Measuring Range 5mm

DM-252

Convex-concave surface can be measured.

Graduation 0.01mm
Measuring Range Concave 5mm
Convex 4mm

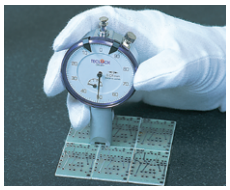

V-Grooved depth measurement of Print circuit board by using DM-251.

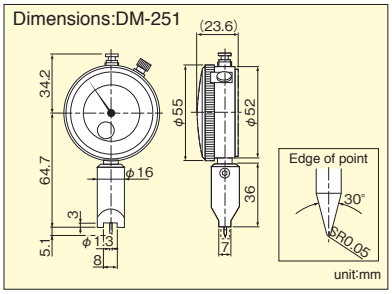

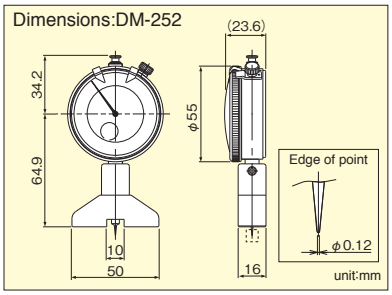

Specifications

Model	Graduation (mm)	Measuring Range (mm)	Accuracy (μm)	Contact Point Form (mm)	Standard Contact Point	Measuring Force (N)	Weight (g)
DM-251	0.01	5	±10	Special Needle	ZS-106	1.4 or less	165
DM-252	0.01	Concave 5mm Convex 4mm	±10	Needle	ZS-595	1.4 or less	230

Coating Thickness Gauges

- Exclusive instrument to measure coating thickness of paint, coating materials and sealing materials.
- Handy type and operation is easy.

DM-264

Small-based handy type

Graduation 0.01mm
Measuring Range 5mm

When top point is pressurized, needle contact point penetrates into painted film and stops at basic material. The penetrating length is thickness of film.

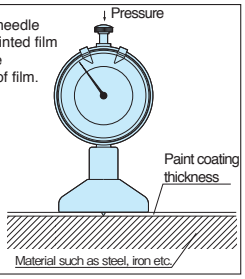

Thickness measurement of painted film waterproof stuff (measuring by pressurization)

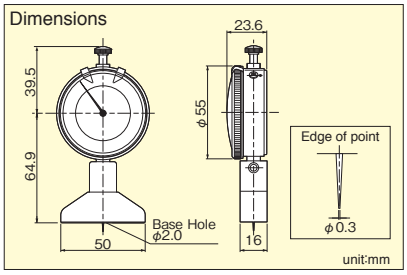

Specifications

Model	Graduation (mm)	Measuring Range (mm)	Accuracy (μm)	Contact Point Form (mm)	Standard Contact Point	Measuring Force (N)	Weight (g)
DM-264	0.01	5	±10	Needle	ZS-518	1.4 or less	230

Gauge Slide type

- Steps measurement can be easily made by moving the gauge to 3 mounting holes.

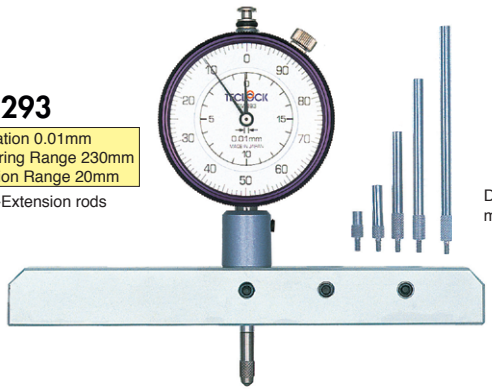

DM-293

Graduation 0.01mm
Measuring Range 230mm
Indication Range 20mm

With 5-Extension rods

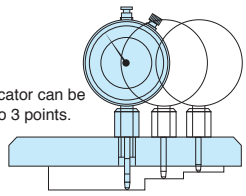

Dial indicator can be moved to 3 points.

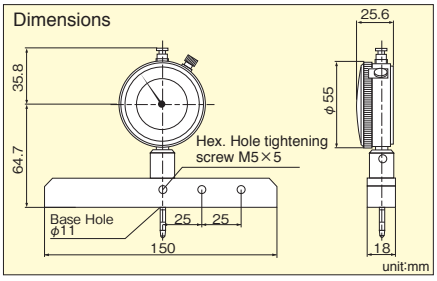

Specifications ※Measuring Range : ( ) value is a Range by using 5pcs extension rods.

Model	Graduation (mm)	Measuring Range (mm)	Accuracy (μm)	Contact Point Form (mm)	Standard Contact Point	Measuring Force (N)	Weight (g)
DM-293	0.01	20(230)	±15	φ3.2 Ball	ZS-034	2.5 or less	510

P Series (0.1mm type)

- This is direct reading specification of which graduation are 0.1-0.9mm.
- 1-10mm can be read by short hand and figure below can be read by pointer. It prevents misreading

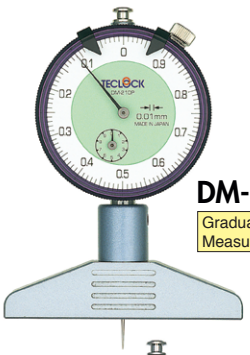

DM-210P
Graduation 0.01mm
Measuring Range 10mm

DM-250P
Graduation 0.01mm
Measuring Range 5mm

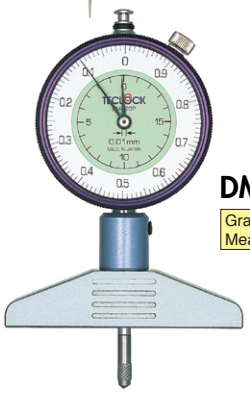

DM-223P
Graduation 0.01mm
Measuring Range 20mm

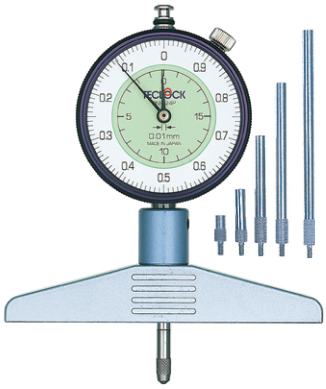

DM-224P
Graduation 0.01mm
Measuring Range 230mm
Indication Range 20mm
With 5-Extension rods

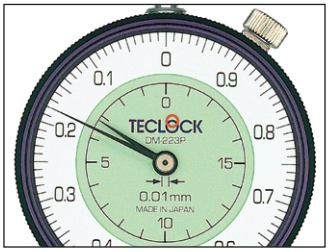

exp. 3.18mm of direct reading.

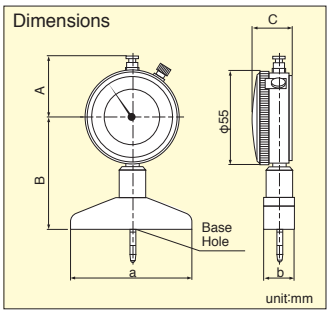

Dimension Table

Model	A	B	C	Base Form a×b	Base Fole Diameter
DM-210P	34.2	64.7	23.6	75×16	2.5
DM-250P	34.2	64.9	23.6	50×16	2.0
DM-223P	35.8	64.7	25.6	75×16	5.2
DM-224P	35.8	64.7	25.6	100×16	5.2

unit:mm

Specifications ※Measuring Range : ( ) value is a Range by using 5pcs extension rods.

Model	Graduation (mm)	Measuring Range (mm)	Accuracy (μm)	Contact Point Form (mm)	Standard Contact Point	Measuring Force (N)	Weight (g)
DM-210P	0.01	10	±12	Needle	ZS-523	1.4 or less	270
DM-250P	0.01	5	±10	Needle	ZS-518	1.4 or less	230
DM-223P	0.01	20	±15	ϕ3.2 Ball	ZS-034	2.2 or less	275
DM-224P	0.01	20(230)	±15	ϕ3.2 Ball	ZS-034	2.5 or less	340

Conventional Digital Depth Gauges

- Digital Exclusive instrument to measure depth and steps of workpiece.
- Low cost and conventional model of which preset function is deleted from standard digital depth gauges.
- Operation is equal to standard digital depth gauges, but it can not measure by installing extension rods. In case that measuring range is over 10mm, please use standard digital depth gauges.
- Printing out of measured data and statistics arithmetic operation can be implemented by connecting it to optional Digital mini-printer SD-763P shown on page 42.

0.01mm Conventional Digital Depth Gauges

DMD-210S2
Needle Contact Points
Resolution 0.01mm
Measuring Range 10mm

DMD-211S2
Φ2 Flat Needle Contact Point
Resolution 0.01mm
Measuring Range 10mm

DMD-213S2
Φ3.2 Steel Ball Contact Point
Resolution 0.01mm
Measuring Range 10mm

DMD-250S2
Needle Contact Points
Resolution 0.01mm
Measuring Range 5mm

DMD-252S2
Φ3.2 Steel Ball Contact
Resolution 0.01mm
Measuring Range Concave 5mm
Convex4mm

0.001mm Conventional Digital Depth Gauges

DMD-2100S2
Needle Contact Points
Resolution 0.001mm
Measuring Range 10mm

DMD-2110S2
Φ2 Flat Needle Contact Point
Resolution 0.001mm
Measuring Range 10mm

DMD-2130S2
Φ3.2 Steel Ball Contact Point
Resolution 0.001mm
Measuring Range 10mm

DMD-2500S2
Needle Contact Points
Resolution 0.001mm
Measuring Range 5mm

DMD-2520S2
Φ3.2 Steel Ball Contact Point
Resolution 0.001mm
Measuring Range Concave 5mm
Convex4mm

Dimensions

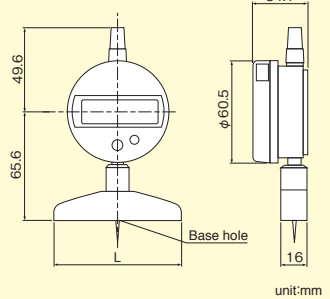

Dimension Table

Model	Base Hole Diameter	L
DMD-210S2	ϕ2.5	75
DMD-211S2	ϕ2.5	75
DMD-213S2	ϕ5.2	75
DMD-250S2	ϕ2.0	50
DMD-252S2	ϕ8.0	50
DMD-2100S2	ϕ2.5	75
DMD-2110S2	ϕ2.5	75
DMD-2130S2	ϕ5.2	75
DMD-2500S2	ϕ2.0	50
DMD-2520S2	ϕ8.0	50

Specifications

Model	Resolution (mm)	Measuring Range (mm)	Accuracy* (μm)	Contact Point Form (or shape) (mm)	Standard Contact Point	Measuring Force (N)	Weight (g)
DMD-210S2	0.01	10	±20	Needle	ZS-523	2.0 or less	270
DMD-211S2	0.01	10	±20	ϕ2 Flat	ZS-530	2.0 or less	270
DMD-213S2	0.01	10	±20	ϕ3.2 Steel Ball	ZS-034	2.0 or less	270
DMD-250S2	0.01	5	±20	Needle	ZS-518	2.0 or less	205
DMD-252S2	0.01	Concave 5, Convex 4	±20	Needle	ZS-595	2.0 or less	200
DMD-2100S2	0.001	10	±5	Needle	ZS-523	2.0 or less	300
DMD-2110S2	0.001	10	±5	ϕ2 Flat	ZS-530	2.0 or less	300
DMD-2130S2	0.001	10	±5	ϕ3.2 Steel Ball	ZS-034	2.0 or less	300
DMD-2500S2	0.001	5	±5	Needle	ZS-518	2.0 or less	235
DMD-2520S2	0.001	Concave 5, Convex 4	±5	Needle	ZS-595	2.0 or less	230

*The quantizing error function is not included.

Standard Digital Depth Gauges

- Digital Depth Gauge can be used for direct measuring depth and steps of workpiece.
- Printing out of measured data and statistics arithmetic operation can be implemented by connecting it to optional Digital mini-printer SD-763P shown on page 42.
- Extension rods can be used by Preset function. (excepting DMD-210J, DMD-211J and DMD-2100J).

0.01mm Standard Digital Depth Gauges

DMD-210J
Needle Contact Points
Resolution 0.01mm
Measuring Range 12mm

DMD-211J
ϕ2 Flat Needle Contact Point
Resolution 0.01mm
Measuring Range 12mm

DMD-213J
ϕ3.2 Steel Ball Contact Point
Resolution 0.01mm
Measuring Range 12mm

DMD-214J
ϕ3.2 Steel Ball Contact Point
Resolution 0.01mm
Measuring Range 220mm
Indication Range 12mm
With 5-Extension rods

DMD-215J
ϕ3.2 Steel Ball Contact Point
Resolution 0.01mm
Measuring Range 220mm
Indication Range 12mm
With 5-Extension rods

Dimensions

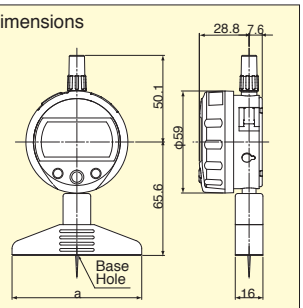

unit : mm

Dimension Table

Model	Base form a×b	Base hole diameter
DMD-210J	75×16	ϕ2.5
DMD-211J	75×16	ϕ2.5
DMD-213J	75×16	ϕ5.2
DMD-214J	75×16	ϕ5.2
DMD-215J	100×16	ϕ5.2

unit : mm

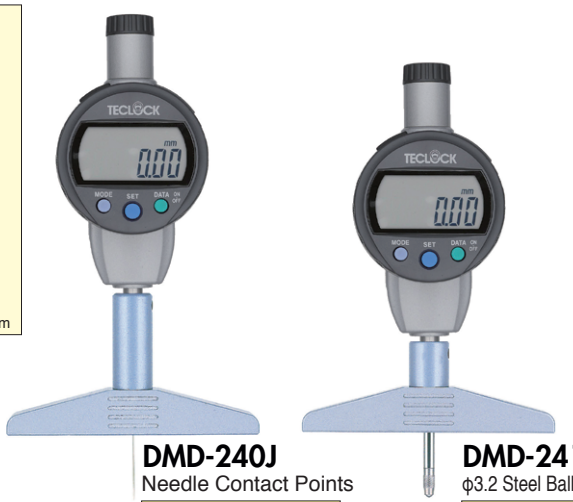

DMD-240J
Needle Contact Points
Resolution 0.01mm
Measuring Range 25.4mm

DMD-241J
ϕ3.2 Steel Ball Contact Point
Resolution 0.01mm
Measuring Range 25.4mm

Dimensions: DMD-240J/241J

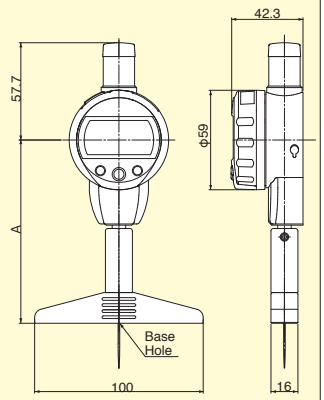

unit : mm

Dimension Table

Model	A
DMD-240J	108.7
DMD-241J	88.7

unit : mm

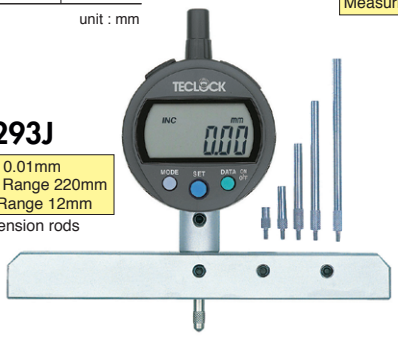

DMD-293J
Resolution 0.01mm
Measuring Range 220mm
Indication Range 12mm
With 5-Extension rods

Dimensions: DMD-293J

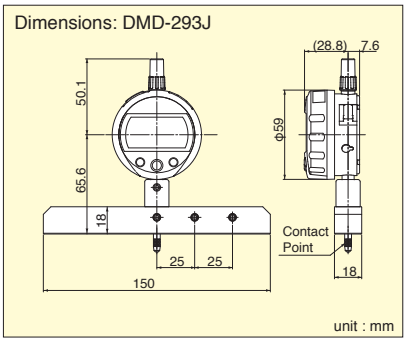

unit : mm

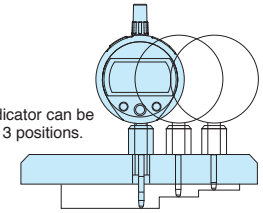

Digital indicator can be moved to 3 positions.

Specifications ※Measuring Range : ( ) value is a Range by using 5pcs extension rods.

Model	Resolution (mm)	Measuring Range (mm)	Accuracy* (μm)	Contact Point Form (or shape) (mm)	Standard Contact Point	Measuring Force (N)	Weight (g)
DMD-210J	0.01	12	±20	Needle	ZS-523	1.0 or less	310
DMD-211J	0.01	12	±20	ϕ2 Flat	ZS-530	1.0 or less	310
DMD-213J	0.01	12	±20	ϕ3.2 Steel Ball	ZS-034	1.0 or less	310
DMD-214J	0.01	12(220)※	±20	ϕ3.2 Steel Ball	ZS-034	2.3 or less	335
DMD-215J	0.01	12(220)※	±20	ϕ3.2 Steel Ball	ZS-034	2.3 or less	375
DMD-240J	0.01	25.4	±20	Needle	ZS-113	1.6 or less	390
DMD-241J	0.01	25.4	±20	ϕ3.2 Steel Ball	ZS-600	1.6 or less	370
DMD-293J	0.01	12(220)※	±20	ϕ3.2 Steel Ball	ZS-034	2.3 or less	545

*The quantizing error function is not included.

0.001mm Standard Digital Depth Gauges

DMD-2100J
Needle Contact Points
Resolution 0.001mm
Measuring Range 12mm

DMD-2150J
ϕ3.2 Steel Ball Contact Point
Resolution 0.001mm
Measuring Range 220mm
Indication Range 12mm
With 5-Extension rods

DMD-2400J
Needle contact points
Resolution 0.001mm
Measuring Range 25.4mm

DMD-2410J
ϕ3.2 Steel Ball Contact Point
Resolution 0.001mm
Measuring Range 25.4mm

Dimensions: DMD-2100J/2150J

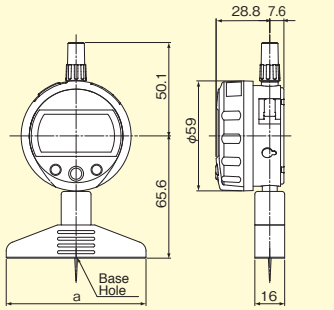

unit : mm

Dimension Table

Model	Base Foam a×b	Base Hole Diameter
DMD-2100J	75×16	ϕ2.5
DMD-2150J	100×16	ϕ5.2

unit : mm

Dimensions: DMD-2400J/2410J

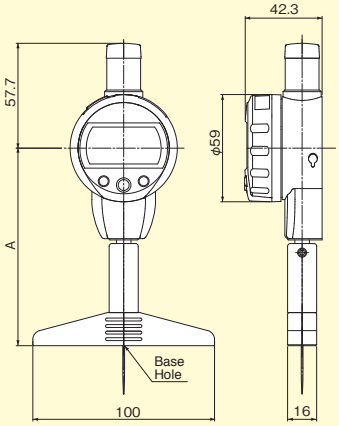

Dimension Table

Model	A
DMD-2400J	108.7
DMD-2410J	88.7

unit : mm

Specifications

※Measuring Range : ( ) value is a Range by using 5pcs extension rods.

Model	Resolution (mm)	Measuring Range (mm)	Accuracy* (μm)	Contact Point Form (or shape) (mm)	Standard Contact Point	Measuring Force (N)	Weight (g)
DMD-2100J	0.001	12	±5	Needle	ZS-523	1.0 or less	310
DMD-2150J	0.001	12(220)※	±5	ϕ3.2 Steel Ball	ZS-034	2.3 or less	375
DMD-2400J	0.001	25.4	±5	Needle	ZS-113	1.6 or less	390
DMD-2410J	0.001	25.4	±5	ϕ3.2 Steel Ball	ZS-600	1.6 or less	370

*The quantizing error function is not included.

Parts & Accessories

Contact Point

unit:mm

ZS-523

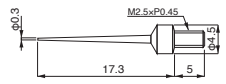

Standard fitment
DM-210 DM-210P
DM-280 DMD-210J
DMD-2100J DMD-210S2
DMD-2100S2

ZS-105

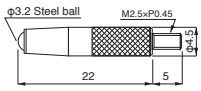

Standard fitment
DM-273

ZS-518

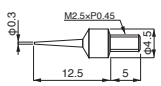

Standard fitment
DM-250 DM-250P
DM-264 DMD-250S2
DMD-2500S2

ZS-034

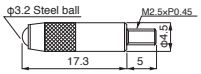

Standard fitment
DM-213 DM-214 DM-223
DM-223P DM-224 DM-224P
DM-233 DM-234 DM-283
DM-293 DMD-213J DMD-214J
DMD-215J DMD-293J
DMD-2150J DMD-213S2
DMD-2130S2

ZS-543

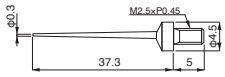

Standard fitment DM-220 DM-230

ZS-530

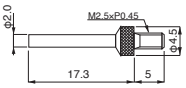

Standard fitment
DM-211 DMD-211J DMD-211S2

ZS-600

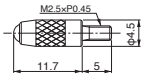

Standard fitment DMD-241J DMD-2410J

ZS-541

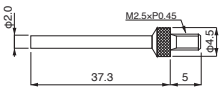

Standard fitment DM-221

ZS-595

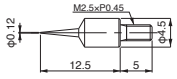

Standard fitment
DM-252 DMD-252J
DMD-252S2 DMD-2520S2

ZS-113

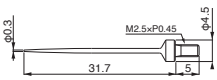

Standard fitment DMD-240J DMD-2400J

Extension Rods

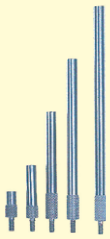

ZS-904
(Set of 5)

ZS-663,664,665,666,670

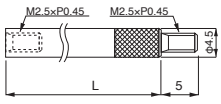

Code No.	L
ZS-670	10
ZS-663	20
ZS-664	40
ZS-665	60
ZS-666	80

Unit:mm

Standard fitment DM-214 DM-224 DM-224P
DM-233 DM-234 DM-293 DMD-214J
DMD-215J DMD-293J

Depth Gauge by Contact Point List

Model	Base hole diameter	Standard contact point	Can be mounted contact point
DM-210	φ2.5	ZS-523	ZS-527 ZS-528 ZS-530
DM-210P			
DMD-210S2			
DMD-210J			
DMD-2100S2			
DMD-2100J			
DM-211	φ2.5	ZS-530	ZS-527 ZS-528 ZS-523
DMD-211J			
DMD-211S2			
DMD-2110S2			

Model	Base hole diameter	Standard contact point	Can be mounted contact point
DM-213	φ5.2	ZS-034	ZS-527 ZS-528 ZS-530 ZS-523 ZS-594
DM-214			
DM-223			
DM-224			
DM-233			
DM-234			
DM-223P			
DM-224P			
DM-293			
DMD-213S2			
DMD-213J			
DMD-2130S2			
DMD-214J			
DMD-215J			
DMD-2150J			
DMD-293J			
DM-250	φ2.0	ZS-518	–
DM-250P			
DMD-250S2			
DMD-2500S2			

Model	Base hole diameter	Standard contact point	Can be mounted contact point
DM-251	φ5.2	ZS-106	—
DM-252	φ8.0	ZS-595	—
DMD-252S2			
DMD-2520S2			
DM-273	φ5.2	ZS-105	—
DM-280	φ3.0	ZS-523	ZS-527 ZS-528 ZS-530
DM-283	φ8.0	ZS-034	ZS-527 ZS-528 ZS-530 ZS-523
DM-264	φ2.0	ZS-518	–
DMD-240J	φ2.5	ZS-113	–
DMD-2400J			
DMD-241J	φ5.2	ZS-600	–
DMD-2410J			